2026 Baja SAE Design Challenge: Brake Pedal Design

Aibel Jomon

Overview

The primary objective of this design was to meet the criteria listed in the 2026 Baja SAE program rules, which was to be able to handle a minimum of 450 lbf (2000 N), be made of aluminum or steel, as well as have the capacity for elements that can handle two independent hydraulic circuits. The secondary goals were to prioritize Design for Manufacturing (DFM) and optimize for weight, with the brake assembly coming in at 1.14 lbs but still roughly retaining a Factor of Safety of 4.97. More of the design philosophies will be covered in the Design Choices section.

Final Design

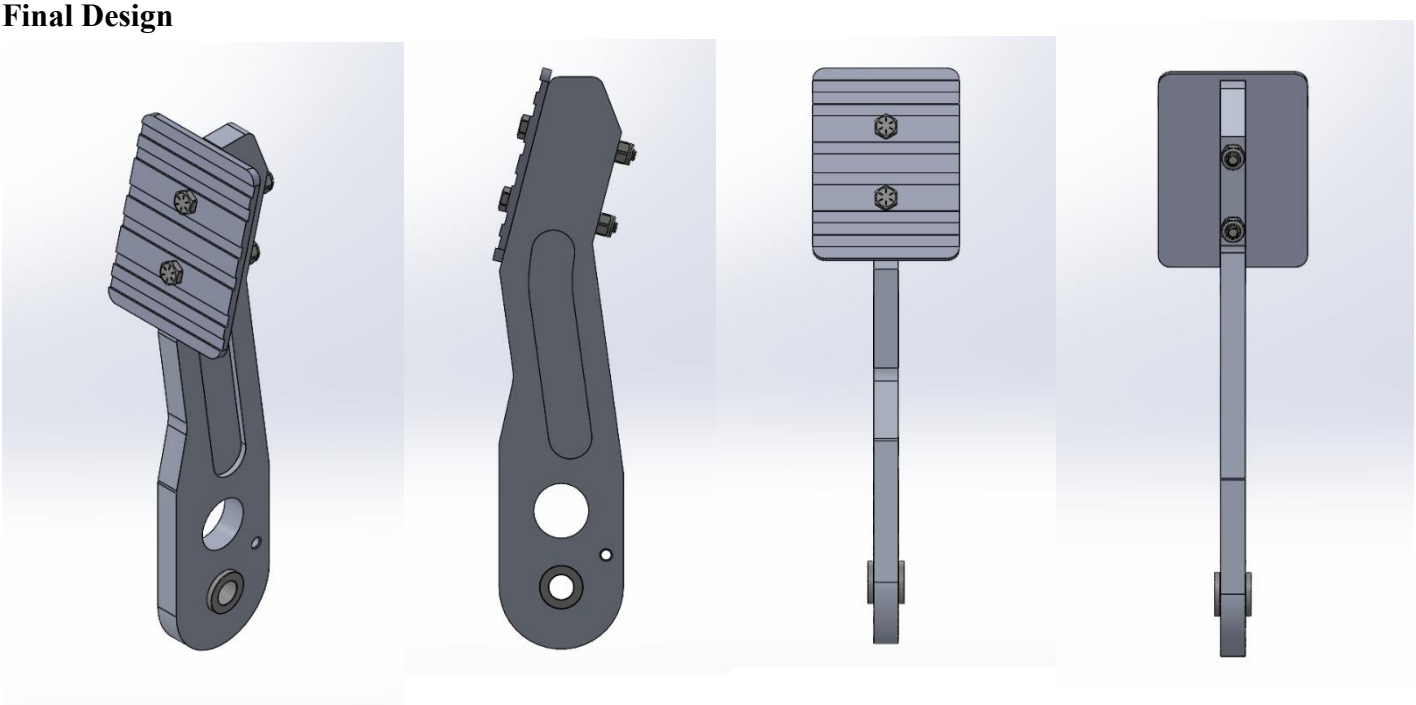

Bill of Materials (BOM)

PART	MATERIAL	DESCRIPTION	UNIT COST
Pedal & Brake Pad	8975K135	12" x 12" x 0.5" aluminum 6061-T6 sheet from Mcmaster-Carr	$38.42
Bolts	92620A551	2x 1/4" -20 thread grade 8 steel 2-1/4" long bolts	$1.17
Locknuts	97135A210	2x grade 8 steel 1/4"-20 nylon insert locknuts	$0.42
Bushings	6338K417	2x Oil Embedded Bronze Flanged Sleeve	$3.68
Total			$43.69

Research

1.1 Material Selection: 6061-T6 Aluminum

Research into optimal materials for high-stress, low-mass structural components led to the selection of 6061-T6 Aluminum for the primary pedal arm and pad. With a yield strength of approximately 275 MPa (40,000 psi) and low density, 6061-T6 provides the necessary structural rigidity to survive panic-stop impulse loads while keeping the overall assembly weight to an absolute minimum. 6061-T6 is also easily machined, readily available, and corrosion resistant, which were all factors that were considered when picking the material.

1.2 Kinematics & Pedal Ratio

A critical factor in the choice of a brake pedal is the mechanical advantage it will provide the driver. If the ratio is too low, the driver has to work incredibly hard and might not even be able to generate sufficient hydraulic pressure. If it's too high, the pedal requires an excessive amount of travel room and does not feel responsive. Industry research for manual, non-power assisted applications target a pedal ratio between 5:1 and 7:1. The decision for this design was for a 5.5:1 ratio with a 8.5" pivot to footpad length and a 1.54" pivot to bias bar length. This ratio can be adjusted as outlined in Design Choices 2.1.

1.3 Dual Hydraulic and Bias Bar Integration

Baja SAE rules strictly require a dual, independent hydraulic braking system. To satisfy this requirement, the pedal is designed around a central spherical bearing to house a standard Wilwood-style Bias Bar system. The design has a hole for a bias bar system so that the integrated bias bar uses its clevises to actuate two separate master cylinders, allowing for tuning of the front to rear brake bias based on gathered data or track conditions. This inclusion of a bias bar system helps in the case of a hydraulic leak since the bar is designed to pivot and bottom out against the bearing housing, allowing the driver to still actuate the surviving master.

Design Choices

The physical geometry of the pedal was driven by a philosophy of rapid manufacturability and serviceability. In a Baja style racing environment, components must be adjustable and retain resistance to environmental factors.

2.1 Modular Architecture and Tuning

Instead of a single piece pedal, a two-part modular system was utilized for adjustable driver ergonomics and to allow for pedal ratio adjustments. The bolt on pad design allows for fast swaps and adjustments to simplify the pad design resulting in much

faster and less expensive iterations through the design as compared to adjusting the primary structural arm. The two-part design also allows for easier machining as with a single piece design a multi axis CNC would be required to cut it out from a solid block of material, resulting in time costs, wasted material, and slower adjustments to the design.

2.2 Design for Manufacturing (DFM) & Rapid Prototyping

The primary arm is dimensioned to be cut from a standard 0.5” thick 6061-T6 aluminum plate. The outer profile is simple enough that a 1:1 scale paper template can be applied directly to the stock, allowing a fabricator to get the shape in minutes versus a complex shape that would require hours of machining. The I-beam weight reduction pockets and all fillets are sized to accommodate standard end mills, minimizing tool changes and simplifying machining tasks. The hole for the bias bar is made with standard 0.005” CNC tolerances in mind allowing for a Loctite connection that has a reasonable amount of adjustability. A small hole was added for a pedal return spring.

2.3 Environmental Adjustments

Standard flanged Oilite bronze bushings were used for the main pivot to guarantee consistent pedal actuation and to allow for protection against dust and mud particles with the bushings being able to self-lubricate and have a high resistance to grit ingress. The brake pad also utilizes a horizontal slotted grip face design to allow for a channel where mud and water can squeeze out of when the driver steps on it and to offer better grip in muddy conditions overall.

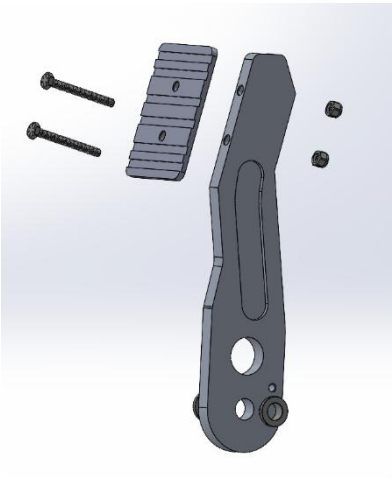

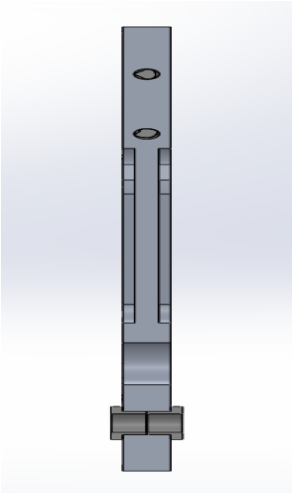

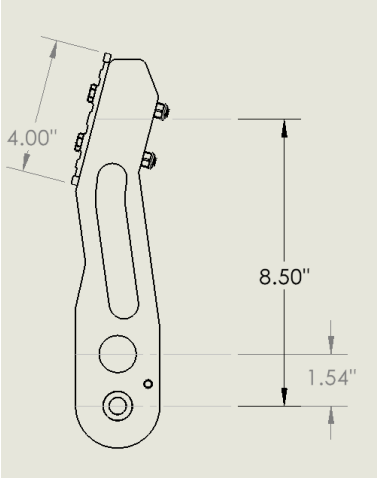

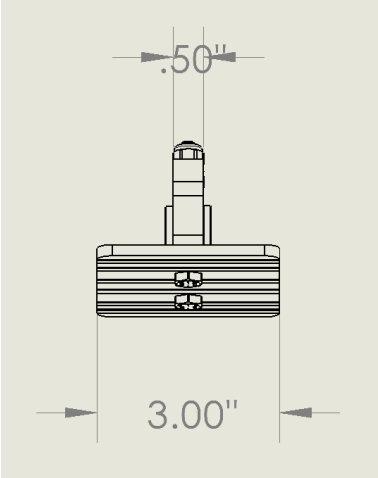

Validation and Finite Element Analysis (FEA)

To ensure the pedal assembly survives a worst case “panic stop” scenario without plastic deformation, a static structural simulation was conducted in SolidWorks. The primary objective was to validate the mass reduction geometry against rulebook mandated braking forces.

3.1 The I-Beam Profile

The primary load case on a brake pedal is an extreme bending moment. Rather than hollowing out the center of the arm, an I-beam cross section was utilized. This geometry aggressively removes mass, while concentrating the aluminum at the outer flanges where tensile and compressive stresses peak. The geometry transitions from an I-beam to a thicker profile at the head and at the base to provide structural support against reaction forces at the pivot bar and bias bar bearing and help support the bolt holes at the head.

3.2 Boundary Conditions and Bolt Simulations

The pivot hole and the bias bar mount were set as fixed geometries, with the pivot hole being a fixed hinge and the bias bar mount being a fixed geometry. A worst-case load of 450 lbf (2000 N) was applied to the face of the footpad. First the modeling was done with virtual fasteners, but the study produced artificial stress singularities, which led to an independent look at the shear forces and clamping forces with the results attached below. To extract accurate structural data the pedal and pad were evaluated as a bonded continuous solid. Manual Bearing stress was calculated to be 3600 PSI at the bolt holes, and 7920 PSI at the bias bearing hole, well under the 40000 PSI yield strength.

3.3 Simulation Results and Conclusion

The optimized geometry demonstrates exceptional structural rigidity while maintaining a low mass. The maximum recorded Von Mises stress under the panic stomp occurs at the transition to the bias bar mount but is still well below the 275 MPa yield strength of 6061-T6 aluminum, resulting in the Factor of Safety of 4.97. The results of this analysis are attached below.

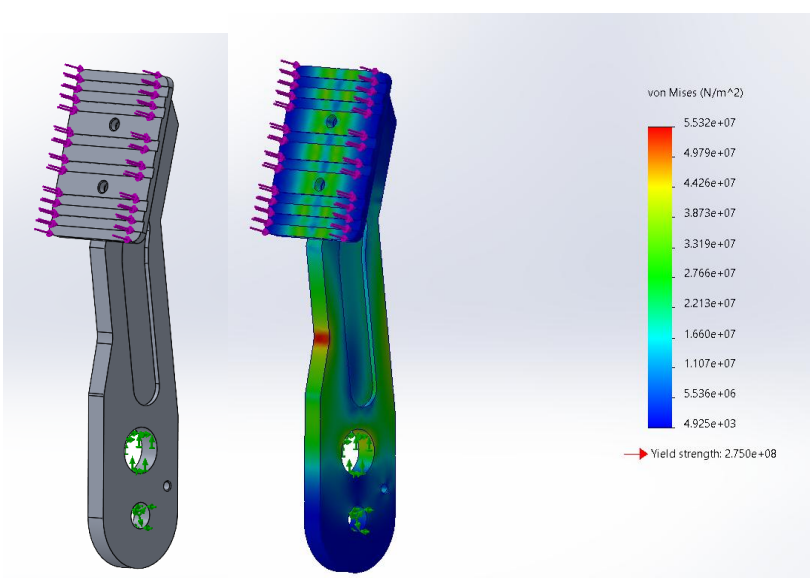

Connector type: Bolt

Type	X-Component	Y-Component	Z-Component	Resultant
Shear Force (lbf)	-0.47685	-1.8338	-0.0011824	1.8948
Axial Force (lbf)	-2,233.5	580.77	0	2,307.8
Bending moment (lbf.in)	0.056427	0.217	0.2045	0.30347

Connector type: Bolt

Type	X-Component	Y-Component	Z-Component	Resultant
Shear Force (lbf)	0.47558	1.8289	0.0073915	1.8897
Axial Force (lbf)	-2,248.3	584.63	0	2,323.1
Bending moment (lbf.in)	0.0049917	0.019196	1.6139	1.614

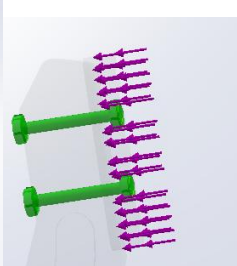

Note: There was force given to both bolts, a 120 lb/in tightening force as well as the 450 lbf stom force, Shear force as shown is well under an excess amount for grade 8 steel screws.